Characteristics of strands to Australian and European Standards

Standard	Nominal diameter [mm]	Minimun tensile strengh [MPa]	Nominal cross-section [mm^2]	Mass per metre [Kg/m]	Nominal modulus od elasticity [GPa]	Tendon minimum breaking load [KN]
prEN-10138	15.7	1.860	150	1,172	195	279
AS 4672	15,2	1.830	143	1,122	195	262
AS 4672	15,2	1.750	143	1,112	195	250

Characteristics of Tendons

Number of strands	15,2 mm diameter strand to AS 4672 1830 Mpa			15,7 mm diameter strand to prEN-10138 1860 Mpa		
	Nominal cross-section [mm^2]	Mass per metre [Kg/m]	Tendon minimum breaking load [KN]	Nominal cross-section [mm^2]	Mass per metre [Kg/m]	Tendon minimum breaking load [KN]
1	143	1,122	262	150	1,172	279
2	286	2,24	524	300	2,34	558
3	429	3,37	786	450	3,52	837
4	572	4,49	1.048	600	4,69	1.116
5	715	5,61	1.310	750	5,86	1.395
6	858	6,73	1.572	900	7,03	1.674
7	1.001	7,85	1.834	1.050	8,20	1.953
8	1.144	8,98	2.096	1.200	9,38	2.232
9	1.287	10,10	2.358	1.350	10,55	2.511
10	1.430	11,22	2.620	1.500	11,72	2.790
11	1.573	12,34	2.882	1.650	12,89	3.069
12	1.716	13,46	3.144	1.800	14,06	3.348
13	1.859	14,59	3.406	1.950	15,24	3.627
14	2.002	15,71	3.668	2.100	16,41	3.906
15	2.145	16,83	3.930	2.250	17,58	4.185
16	2.288	17,95	4.192	2.400	18,75	4.464
17	2.431	19,07	4.454	2.550	19,92	4.743
18	2.574	20,20	4.716	2.700	21,10	5.022
19	2.717	21,32	4.978	2.850	22,27	5.301
20	2.860	22,44	5.240	3.000	23,44	5.580
21	3.003	23,56	5.502	3.150	24,61	5.859
22	3.146	24,68	5.764	3.300	25,78	6.138
23	3.289	25,81	6.026	3.450	26,96	6.417
24	3.432	26,93	6.288	3.600	28,13	6.696
25	3.575	28,05	6.550	3.750	29,30	6.975
26	3.718	29,17	6.812	3.900	30,47	7.254
27	3.861	30,29	7.074	4.050	31,64	7.533
28	4.004	31,42	7.336	4.200	32,82	7.812
29	4.147	32,54	7.598	4.350	33,99	8.091
30	4.290	33,66	7.860	4.500	35,16	8.370
31	4.433	34,78	8.122	4.650	36,33	8.649
32	4.576	35,90	8.384	4.800	37,50	8.928
33	4.719	37,03	8.646	4.950	38,68	9.207
34	4.862	38,15	8.908	5.100	39,85	9.486
35	5.005	39,27	9.170	5.250	41,02	9.765
36	5.148	40,39	9.432	5.400	42,19	10.044
37	5.291	41,51	9.694	5.550	43,36	10.323

TPEA Active Anchorages

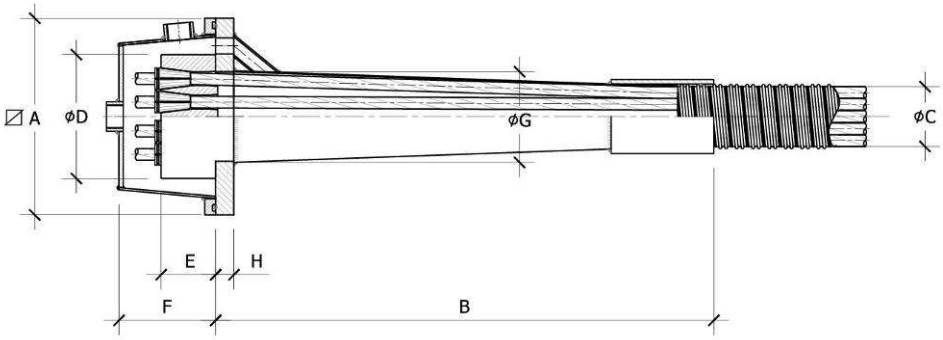

Tendon type	4Φ0,6"	7Φ0,6"	9Φ0,6"	12Φ0,6"	15Φ0,6"	19Φ0,6"	25Φ0,6"	31Φ0,6"	37Φ0,6"
A Trumpet bearing plate side [mm]	170	200	240	270	300	340	410	440	500
B Trumpet length [mm]	325	400	545	685	960	825	1290	1163	1225
C Duct internal diameter * [mm]	51	65	75	80	90	100	110	120	140
D Anchor block diameter [mm]	110	125	150	170	220	220	280	280	300
E Anchor block height [mm]	65	70	70	78	80	85	95	110	125
F Grout cap height [mm]	120	125	125	133	135	140	150	165	180
G Trumpet bearing plate inner diameter [mm]	67	88	108	123	155	155	200	200	224,5
H Trumpet bearing plate thickness (mm)	15	20	25	25	30	30	45	45	50

*Dimensions for standard steel corrugated duct. Corrugated plastic duct and steel tube technical data sheets available under request.

Temporary or permanent Grout Cap needed for grouting operation.

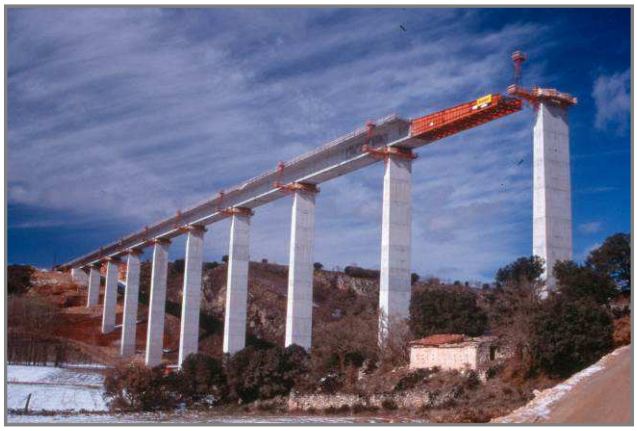

Bursting Reinforcement and Spacing & Edge distances

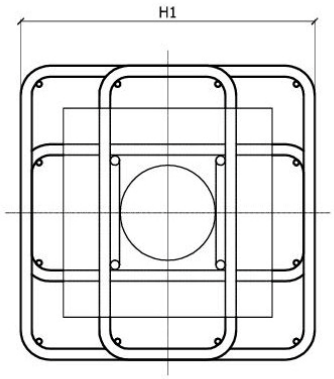

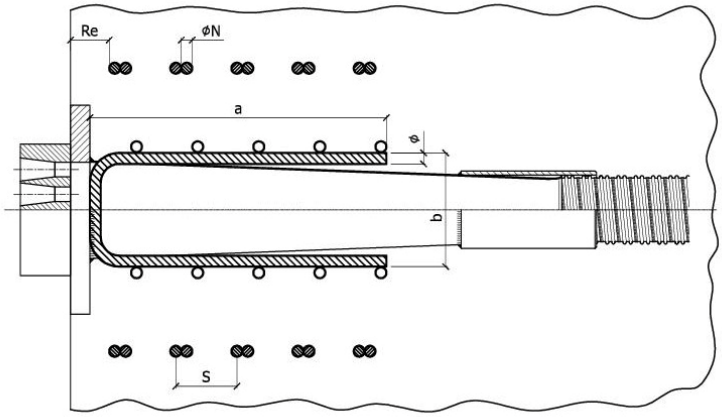

Case I: Concrete strength at stressing = 27.5 MPa

Tendon type	4Φ0,6"	7Φ0,6"	9Φ0,6"	12Φ0,6"	15Φ0,6"	19Φ0,6"	25Φ0,6"	31Φ0,6"	37Φ0,6"
Class of reinforcement steel	Fe500	Fe500	Fe500	Fe500	Fe500	Fe500	Fe500	Fe500	Fe500
ΦN Reinforcement diameter [mm]	10	12	12	12	16	16	20	20	20
N Number reinforcement levels	3	4	4	5	5	6	6	6	7
H1 Dimension of square stirrups (1 per reinforcement level)	245x245	290x290	340x340	380x380	430x430	500x500	600x600	640x640	720x720
Dimension of rectangular stirrups (2 per reinforcement level)	245x100	290x130	340x155	380x177	430x194	500x220	600x270	640x288	720x320
Re Distance between external surface and first stirrup [mm]	50	50	50	50	50	50	50	50	50
S Space between reinforcement levels	85	75	90	80	90	85	100	100	105
Dimension of U bars (a x b)	80x245	106x290	130x330	147x375	162x420	180x490	230x570	248x610	272x690
Minimum distance between tendons [mm]	245	290	340	380	430	500	600	640	720
Minimum distance tendon to external surfaces [mm]	(0.5 · Dt) + required minimum concrete cover								

Case II: Concrete strength at stressing = 40 MPa

Tendon type	4Φ0,6"	7Φ0,6"	9Φ0,6"	12Φ0,6"	15Φ0,6"	19Φ0,6"	25Φ0,6"	31Φ0,6"	37Φ0,6"
Class of reinforcement steel	Fe500	Fe500	Fe500	Fe500	Fe500	Fe500	Fe500	Fe500	Fe500
ΦN Reinforcement diameter [mm]	10	12	12	12	16	16	20	20	20
N Number reinforcement levels	3	4	4	5	4	5	5	6	6
H1 Dimension of square stirrups (1 per reinforcement level)	210x210	250x250	300x300	330x330	380x380	430x430	520x520	550x550	630x630
Dimension of rectangular stirrups (2 per reinforcement level)	210x100	250x120	300x140	330x155	380x195	430x220	520x265	550x280	630x320
Re Distance between external surface and first stirrup [mm]	50	50	50	50	50	50	50	50	50
S Space between reinforcement levels	70	60	80	65	100	90	90	90	110
Dimension of U bars (a x b)	80x210	96x250	116x300	125x325	163x370	180x420	225x490	240x520	272x600
Minimum distance between tendons [mm]	210	250	300	330	380	430	520	550	630
Minimum distance tendon to external surfaces [mm]	(0.5 · Dt) + required minimum concrete cover								

Distances between structure edges and anchorages or between anchorages may be reduced until a 15% in one direction if they are increased proportionally in the orthogonal direction.

TPEC Coupler Anchorages

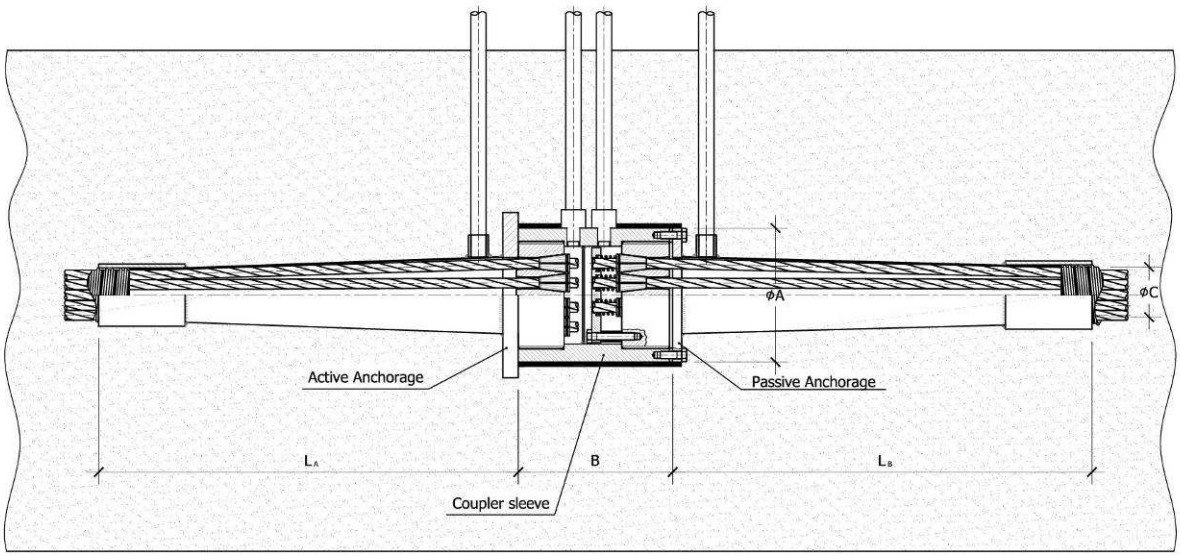

Tendon type	4Φ0,6"	7Φ0,6"	9Φ0,6"	12Φ0,6"	15Φ0,6"	19Φ0,6"	25Φ0,6"	31Φ0,6"	37Φ0,6"
A Connection cylinder ext. diam. [mm]	140	168	190	219	273	273	324	340	390
B Connection cylinder length [mm]	221	231	231	247	254	264	285	315	336
L_A Active trumpet length [mm]	325	400	545	685	960	825	1290	1163	1225
L_P Passive trumpet length [mm]	325	400	545	685	960	825	1290	1163	1225
C Duct internal diam. * [mm]	51	65	75	80	90	100	110	120	140

*Dimensions for standard steel corrugated duct. Corrugated plastic duct and steel tube technical data sheets available under request.

The Tecpresa system requires the installation of bursting reinforcement at the active trumpet side of the coupler. No bursting reinforcement is required at the passive trumpet side.
The required bursting reinforcement is the same as the one required for active anchorages.

TPEPA Passive Automatic Anchorages

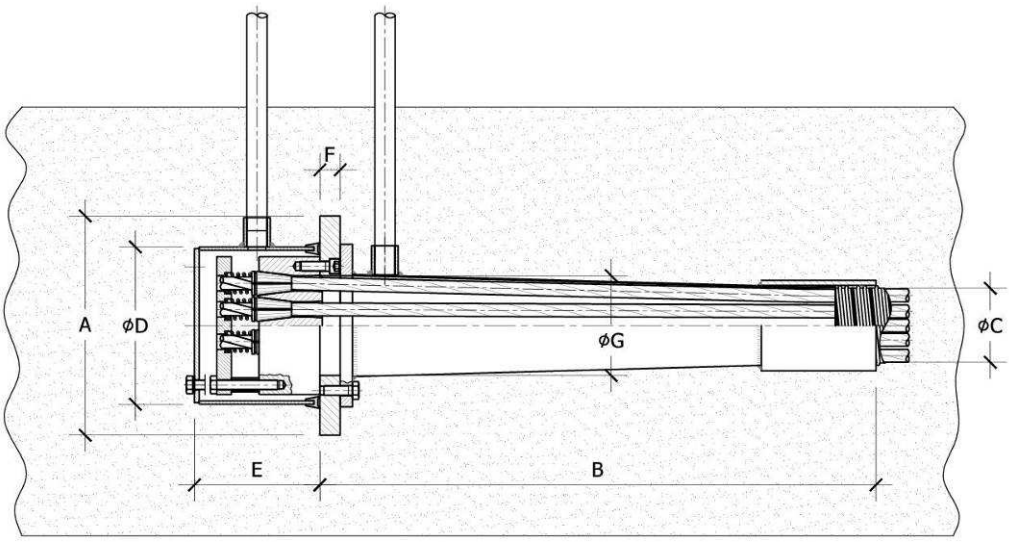

Tendon type	4Φ0,6"	7Φ0,6"	9Φ0,6"	12Φ0,6"	15Φ0,6"	19Φ0,6"	25Φ0,6"	31Φ0,6"	37Φ0,6"
(A) Trumpet side [mm]	170	200	240	270	300	340	410	440	500
(B) Trumpet length [mm]	325	400	545	685	960	825	1290	1163	1225
(C) Duct internal diam. * [mm]	51	65	75	80	90	100	110	120	140
(D) Protection cap external diameter [mm]	124	156	179	190	254	254	320	320	356
(E) Protection cap height [mm]	139	144	144	155	159	164	176	191	206
(F) Bearing plate thickness [mm])	15	20	25	25	30	30	45	45	50
(G) Trumpet bearing plate inner diameter [mm]	67	88	108	123	155	155	200	200	224,5

*Dimensions for standard steel corrugated duct. Corrugated plastic duct and steel tube technical data sheets available under request.

The Tecpresa passive anchorages require the same bursting reinforcement than the active anchorages.

Block-out Dimensions

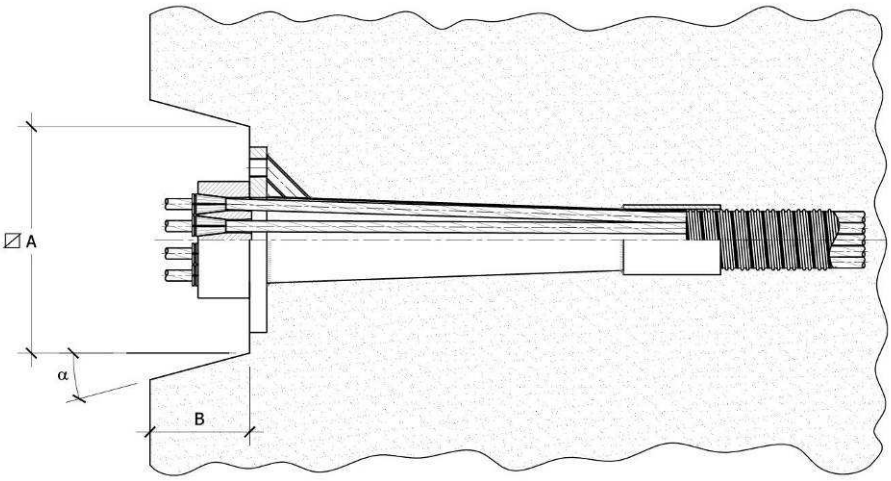

Tendon type	4 0,6"	7 0,6"	9 0,6"	12 0,6"	15 0,6"	19 0,6"	25 0,6"	31 0,6"	37 0,6"
A Block-out vertical side [mm]	230	290	330	330	420	420	480	520	560
B Block-out deepness [mm]	125	135	135	145	150	155	160	175	190
α Block-out angle [mm]	10	10	15	15	15	15	30	30	30

Stressing Jack Data and Clearance Requirements

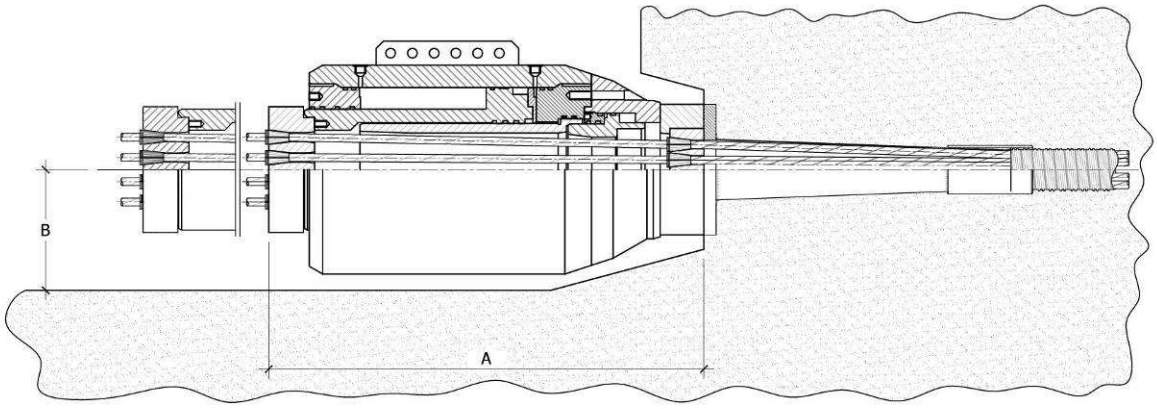

Jack designation	TP-120	TP-200	TP-350		TP-600		TP-700	TP-1000	
Type of tendons	4/0,6"	7/0,6"	9/0,6"	12/0,6"	15/0,6"	19/0,6"	25/0,6"	31/0,6"	37/0,6"
Jack capacity [KN]	1098	1862	3185		5145		5880	9163	
Piston área [cm^2]	210,3	354,2	624,4		867,9		1102,7	1571,6	
Stroke [mm]	260	260	255		260		260	260	
Weight [Kg]	140	275	550		805		1200	1500	
Jack length (mm)	810	860	880		965		1090	1090	
Jack external diameter [mm]	245	320	430		500		590	680	
(A) [mm]	150	190	250		280		325	370	
(B) Strand overlength [mm]	860	910	930		1015		1100	1140	
Total length clearance [mm]	1880	1990	2025		2190		2350	2440	

Detailing of Tendon Layout

Tendon type	4Φ0,6"	7Φ0,6"	9Φ0,6"	12Φ0,6"	15Φ0,6"	19Φ0,6"	25Φ0,6"	31Φ0,6"	37Φ0,6"
Minimum radii of curvature * [m]	3	3,9	4,4	5,1	5,7	6,4	7,4	8,2	9,0
Straight length behind the anchorage [mm]	750	750	750	800	1000	1100	1400	1400	1500

*According FIB Model Code 2010

Friction Coefficients μ and k

Application	Friction coefficient μ (rad^{-1})	Wobble coefficient k (rad/m)
Internal multistrand tendon with corrugated steel strip sheath	0,17 – 0,19	0,005 – 0,010
Internal multistrand tendon with plastic sheath	0,12 – 0,14	0,005 – 0,010
Internal multistrand tendon with smooth steel tube	0,16 - 0,24	0,005 – 0,010

The values consider no significant corrosion in the strands or ducts and are valid from slightly lubricated tendons (lower range limits) to tendons without lubrication (higher range limits).

Short and fully straight internal tendons may also consider k=0.